PAGE	374

BY	CHK	REVISION RECORD MODIFICATIONS	DATE	REV.
ALLEN		RELEASE TO PRODUCTION	2007,9,12	1.0

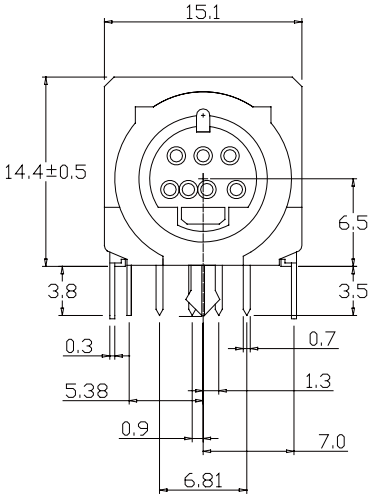

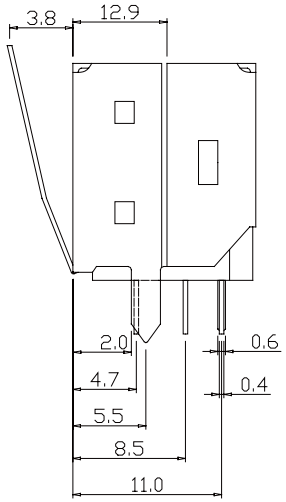

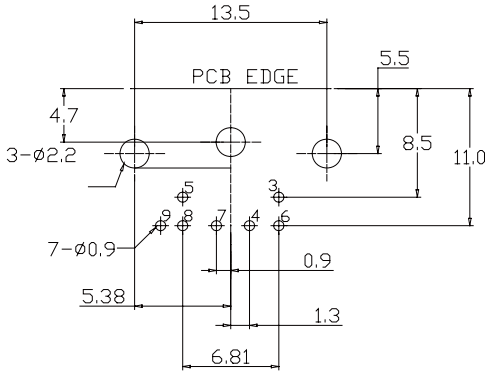

P.C.B. RECOMMEND LAYOUT
BOTTOM VIEW

No.	NAME	MATERIAL	FINISH	Q'TY	REMARK
1	HOUSING	PBT G.F.	BLACK	1	
2	CONTACT	PHOS. BRONZE T:0.2	GOLD-TIN PLATED	7	N:1~5u"; TIN:3u" GOLD:1~3u"
3	SHIELD	BRASS T:0.3	TIN PLATED	1	TIN:120~200u"
4	BACK COVER	PBT G.F.	BLACK	1	
5	SPRING SHIELD	STAINLESS T:0.2		1	

PartNo.:MDJ-508RLS-7S-L

APPRO	CHECK	DRAWN	PART NO.	Part No.:MDJ-508RLS-7S-L			DESCRIPTION
			ITEM NO.				
			DRAW NO.				
			UNIT	mm	SCALE	no	
			TOLER		NO.		

Tel: 0769 22020068 Fax: 0769 22020069 E-mail: sales@vigortec.com